Zootechnics-Ecology
Zootechnie-Écologie
Viehzucht-Umweltforschung
Accesorios para cisternas

art. 70

giunto girevole

tourning joint
joint tournant
Drehgelenk
nudo girable

Codici di ordinazione
Purchase article numbers

	4"	6"	8"	10"
Giunto girevole Tourning joint	ARZO 070 100 000	ARZO 070 150 000	ARZO 070 200 000	ARZO 070 250 000

Ø"	4"	6"	8"	10"
L	127	127	127	127
D	250	290	350	400
I	220	260	320	360
fori holes	6	6	6	6
F	15	15	15	15
sfere ball	62	88	112	138
Pgr ~	15.900	20.500	27.000	33.000

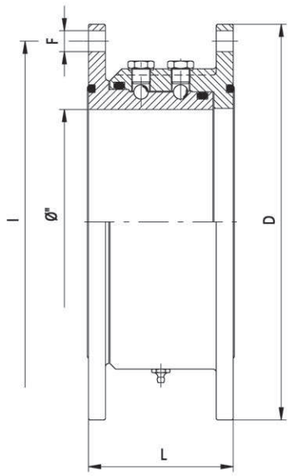

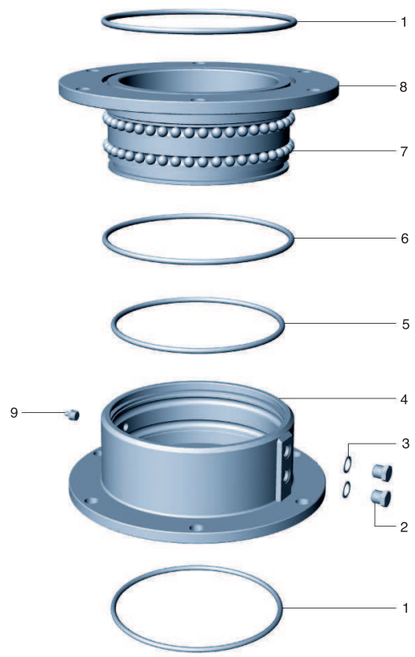

Condizioni di esercizio
Work conditions

DN	4" - 6" - 8" - 10"
P(Bar)	6
P(PSI)	90
T °C	-15 +80

	CODICE / CODE	DENOMINAZIONE	DENOMINATION	MATERIALE	MATERIAL
1	. . OR 024 045 015	OR 207 (Øi 129,54x6,99) 4"	O RING 207 (Øi 129,54x6,99) 4"	GOMMA NBR 75	NBR 75 RUBBER
1	. . OR 070 150 015	OR 233 (Øi 181,00x6,99) 6"	O RING 233 (Øi 181,00x6,99) 6"	GOMMA NBR 75	NBR 75 RUBBER
1	. . OR 070 200 015	OR 244 (Øi 227,97x6,99) 8"	O RING 244 (Øi 227,97x6,99) 8"	GOMMA NBR 75	NBR 75 RUBBER
1	. . OR 070 250 015	OR 252 (Øi 278,77x6,99) 10"	O RING 252 (Øi 278,77x6,99) 10"	GOMMA NBR 75	NBR 75 RUBBER
2	TOZO 070 100 006	TAPPO 3/8" ES 20	COVER 3/8" ES 20	OTTONE UNI EN 12165	UNI EN 12165 BRASS
3	ROAL 070 100 008	RONDELLA Ø22x17x1,5	WASHER Ø22x17x1,5	ALLUMINIO	ALUMINIUM
4	FGZO 070 100 002	CORPO FEMMINA 4"	FEMALE BODY (4")	GHISA Gs400 UNI EN 1563	Gs400 UNI EN 1563 cast iron
4	FGZO 070 150 002	CORPO FEMMINA 6"	FEMALE BODY (6")	GHISA Gs400 UNI EN 1563	Gs400 UNI EN 1563 cast iron
4	FGZO 070 200 002	CORPO FEMMINA 8"	FEMALE BODY (8")	GHISA Gs400 UNI EN 1563	Gs400 UNI EN 1563 cast iron
4	FGZO 070 250 002	CORPO FEMMINA 10"	FEMALE BODY (10")	GHISA Gs400 UNI EN 1563	Gs400 UNI EN 1563 cast iron
5	. . OR 070 100 004	OR 197 (Øi 114,70x6,99) 4"	O RING 197 (Øi 114,70x6,99) 4"	GOMMA NBR 75	NBR 75 RUBBER
5	. . OR 070 150 004	OR 228 (Øi 166,70x6,99) 6"	O RING 228 (Øi 166,70x6,99) 6"	GOMMA NBR 75	NBR 75 RUBBER
5	. . OR 070 200 004	OR 242 (Øi 215,30x6,99) 8"	O RING 242 (Øi 215,30x6,99) 8"	GOMMA NBR 75	NBR 75 RUBBER
5	. . OR 070 250 004	OR 250 (Øi 266,10x6,99) 10"	O RING 250 (Øi 266,10x6,99) 10"	GOMMA NBR 75	NBR 75 RUBBER
6	. . OR 024 045 015	OR 207 (Øi 129,54x6,99) 4"	O RING 207 (Øi 129,54x6,99) 4"	GOMMA NBR 75	NBR 75 RUBBER
6	. . OR 070 150 015	OR 233 (Øi 181,00x6,99) 6"	O RING 233 (Øi 181,00x6,99) 6"	GOMMA NBR 75	NBR 75 RUBBER
6	. . OR 070 200 005	OR 245 (Øi 234,32x6,99) 8"	O RING 245 (Øi 234,32x6,99) 8"	GOMMA NBR 75	NBR 75 RUBBER
6	. . OR 070 250 004	OR 250 (Øi 266,10x6,99) 10"	O RING 250 (Øi 266,10x6,99) 10"	GOMMA NBR 75	NBR 75 RUBBER
7	SFAC 070 100 003	SFERA Ø1/2"	BALL Ø 1/2"	ACCIAIO AL CROMO	CHROME - STEEL
8	FGZO 070 100 001	CORPO MASCHIO 4"	MALE BODY (4")	GHISA Gs400 UNI EN 1563	Gs400 UNI EN 1563 cast iron
8	FGZO 070 150 001	CORPO MASCHIO 6"	MALE BODY (6")	GHISA Gs400 UNI EN 1563	Gs400 UNI EN 1563 cast iron
8	FGZO 070 200 001	CORPO MASCHIO 8"	MALE BODY (8")	GHISA Gs400 UNI EN 1563	Gs400 UNI EN 1563 cast iron
8	FGZO 070 250 001	CORPO MASCHIO 10"	MALE BODY (10")	GHISA Gs400 UNI EN 1563	Gs400 UNI EN 1563 cast iron
9	INGR 002 100 012	INGRASSATORE 1/4" G	GREASE NIPPLE 1/4" G	ACCIAIO	STEEL